Grootvlei Phase 1: 20MW Concept Design Revision 0.5

Grootvlei PS Repurposing - Bitmach Bitcoin Mining

09/02/2026

Document Title	Grootvlei Power Station – Phase 1 Dispatchable Bitcoin Mining Facility (Nominal 20 MW) – Concept Design
Client	Eskom SOC Ltd
Project / Site	Grootvlei Power Station (Mpumalanga) – Cooling Tower 5 area (Phase 1)
Document No	BM-GV-CD-0001
Revision	0.5 (Draft for Review)
Date	09/02/2026
Prepared for	Eskom (GX / DX / TX) – Pilot Programme Evaluation
Prepared by	Bitmach Engineering

Revision History:

Rev	Date	Description
0.5	09/02/2026	Draft concept design for Eskom review

Document Status & Limitations:

This document represents a Stage 2 Concept & Viability design. Equipment ratings, quantities, and configurations are preliminary and will be confirmed during Stage 3 (Design Development) through surveys, OEM data, Eskom interface confirmation, and detailed studies (protection, fault levels, earthing, harmonics, thermals, constructability).

This document is not for construction.

Relevant Background and Supporting Documents

1. Technical Analysis of a Bitcoin Mining Plant
2. Decentralised Flexible Load Architecture for Congestion Relief & Grid Stability
3. Flexible Digital Load Deployment at Grootvlei Power Station
4. Bitmach: A large-scale ancillary service atGrootvlei Power Station
5. Bitcoin Mining at Grootvlei Power Station. Prepared by BitMach Pty (Ltd) for Eskom. March 2025

Introduction

Grootvlei Power Station is a coal-fired power station operated by Eskom, located near Balfour in Mpumalanga, South Africa. The station consists of six (6) generating units, of which three are still in commercial operation. Eskom is in the process of repurposing the power station as the remaining commercial units are nearing end of life.

Bitmach is a South African–based digital infrastructure and Bitcoin mining company focused on building, owning, and operating large-scale high-performance computing (HPC) and Bitcoin mining facilities. The proposed repurposing concept uses Bitcoin mining as a flexible, dispatchable electrical load that can be curtailed rapidly and predictably in response to Eskom system needs and/or power station operational requirements.

This Concept Design (Stage 2 – Concept & Viability) defines the preliminary technical solution for the Phase 1 deployment at Grootvlei Power Station. Phase 1 is a nominal 20 MW facility implemented using containerised modules, designed to be scalable toward larger deployments through subsequent phases. The Phase 1 load is expected to comprise:

- Approximately 20 MW of dispatchable mining load (containerised mining modules), operated modularly (container-level control) and capable of rapid curtailment; and
- One (1) essential services container housing the central control room (PLC/SCADA interface equipment, operator interface, networking, fire detection & alarm panel, UPS, and other critical auxiliary systems).

Two medium-voltage supply configurations are being evaluated with Eskom stakeholders:

- Option A: Three (3) × 630 A feeders at 6.6 kV feeding an on-site 6.6 kV ring / switching station; and
- Option B: A dedicated 6.6 kV 2000 A incomer / direct supply arrangement to a dedicated Bitmach 6.6 kV switchboard (subject to Eskom confirmation of the connection point and feeder availability).

The purpose of this document is to present the concept-level design basis, preliminary equipment philosophy and interface assumptions required for Eskom (GX/DX/TX) to confirm feasibility, define the point of connection, confirm metering and control requirements for dispatchability, and progress to Stage 3 (Design Development).

Site Location

Proposed Phase 1 installation area (within Grootvlei site):

- GPS location: -26.749044025577717, 28.498914904233995
- Municipality: Dipaleseng Local Municipality
- Phase 1 is intended as a containerised deployment located at/near Cooling Tower 5 (refer to Plant Layout section).
- The preliminary concept assumes an MV cable route from the Unit 5 6.6 kV source area to the Cooling Tower 5 installation area.

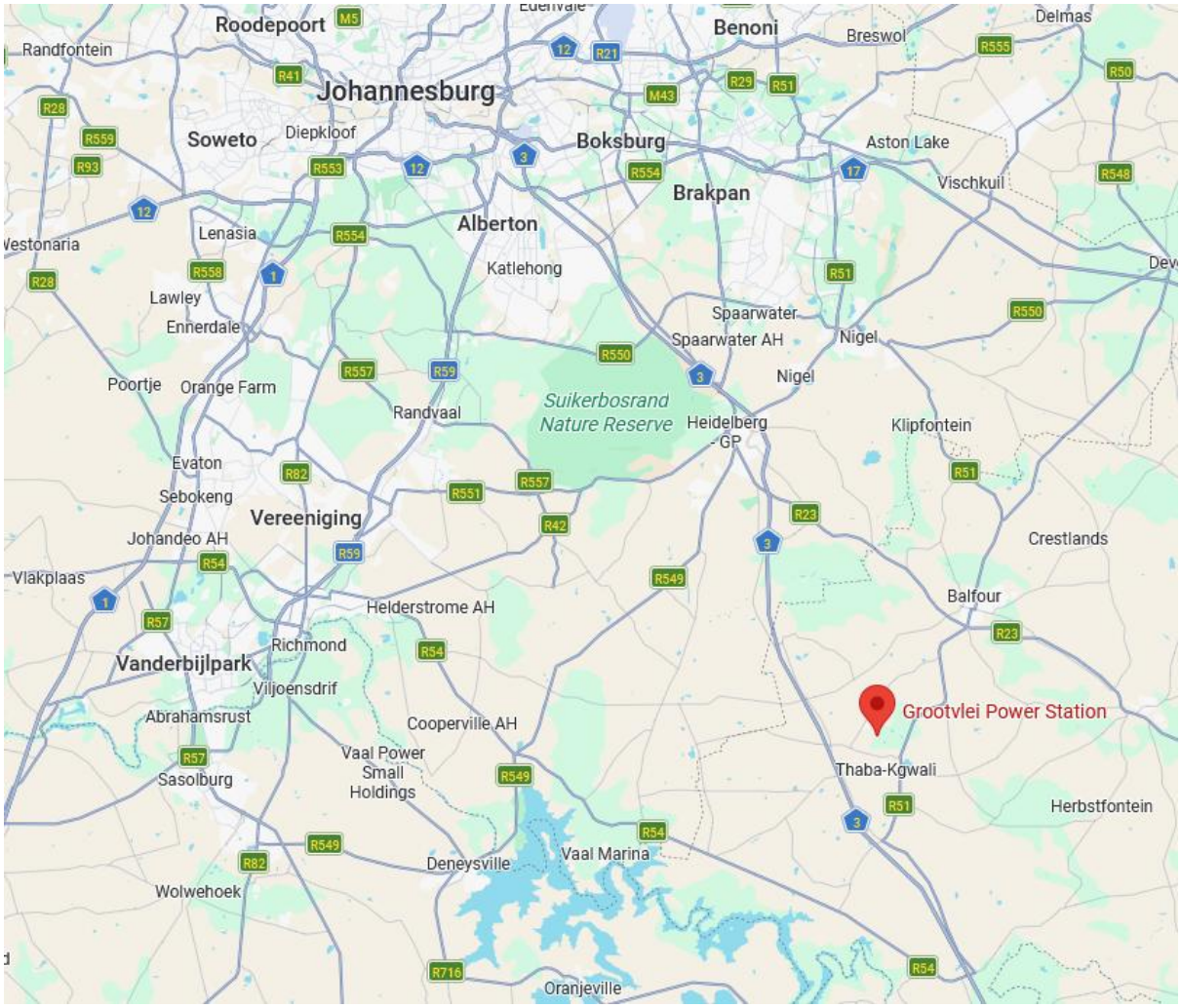

Scope

This design report outlines the Stage 2 concept design considerations and requirements for a Phase 1, nominal 20 MW, dispatchable Bitcoin mining facility at Grootvlei Power Station.

Scope of Supply / Works (Bitmach facility):

- Medium Voltage (6.6 kV) receiving and distribution concept, including the on-site switching philosophy (ring / board configuration), protection approach and isolation philosophy.
- MV/LV transformers and LV distribution to modular mining containers, including allowance for harmonic mitigation and power quality compliance.
- Containerised “essential services” package (control room container) including UPS, communications equipment, operator interface, and fire detection/alarm panels.
- Mechanical cooling concept for the mining modules (dispatchable operation considered in cooling and control philosophy).
- Civil / structural concept for container placement, cable routing (trenches/ducts), fencing and access control, and basic drainage/housekeeping.

Interfaces / Exclusions (Eskom responsibility unless agreed otherwise):

- Upstream Eskom reticulation and network modifications beyond the defined Point of Connection (PoC), including any work on transmission yard equipment and existing station protection schemes outside the agreed interface.
- Eskom metering, customer agreement and registration requirements (e.g., ACNIC registration and metering specification), noting that Bitmach will provide equipment lists, ramp-up schedule and load data to support these processes.
- Final confirmation of feeder availability, busbar limits, cable routing constraints, protection relay health and breaker status on existing boards.

Proposed Power Supply

- It is proposed to utilise the existing unit 5, Unit transformer at Grootvlei Power Station.

Project Stages (for reference):

- Stage 1: Project Inception
- Stage 2: Concept and viability (Concept design)
- Stage 3: Design Development (Detailed design)
- Stage 4: Documentation and Procurement
- Stage 5: Construction and commissioning
- Stage 6: Close-out

Standards

Where Eskom-specific standards, specifications, and site procedures apply, they shall take precedence over the generic standards listed below.

Application / System	Standard	Title / Scope
Medium Voltage Switchgear & Control	SANS 62271-1	High-voltage switchgear and controlgear – Common specifications
	SANS 62271-200	AC metal-enclosed switchgear and controlgear for rated voltages above 1 kV up to 52 kV
	IEC 62271-200	Internal arc classification (IAC AFLR), construction and testing
	SANS 62271-100	Alternating current circuit-breakers (MV)
	SANS 62271-102	Disconnectors and earthing switches
Medium Voltage RMU	SANS 62271-105	Alternating current disconnectors and earthing switches (RMU construction)
Low Voltage Switchgear & Controlgear	SANS 61439 series	LV switchgear and controlgear assemblies
	SANS 60947-2	Circuit-breakers (MCCB / ACB)
	SANS 60947-3	Switches, disconnectors and switch-disconnectors
	SANS 60947-6-1	Automatic Transfer Switching Equipment (ATSE / ATS)
Power Transformers	SANS 60076-1	Power transformers – General requirements
	SANS 60076-2	Temperature rise
	SANS 60076-3	Insulation levels and dielectric tests
	SANS 60076-5	Short-circuit withstand
	SANS 60076-7	Loading guide for oil-immersed transformers
	SANS 60076-10	Sound level determination
	SANS 60076-11	Dry-type transformers
Cables – Medium Voltage	SANS 1339	MV XLPE insulated power cables
	IEC 60502-2	Power cables for rated voltages 6 kV and 12 kV
Cables – Low Voltage	SANS 1507	LV power cables
	IEC 60502-1	Power cables for rated voltages up to 1 kV
Short-Circuit Calculations	SANS 60909	Short-circuit currents in three-phase AC systems
Protection Relays & Equipment	SANS 60255	Measuring relays and protection equipment
Metering & Instrument Transformers	IEC 62052-11	General requirements for electricity meters
	IEC 62053-21	Static active energy meters (Class 1 / 2)
	IEC 62053-22	Static active energy meters (Class 0.2S / 0.5S)
	IEC 62053-23	Reactive energy meters
	IEC 61869 series	Current and voltage transformers (CTs & VTs)
Power Quality & Harmonics	IEC 61000-2-4	Compatibility levels in industrial plants

	IEC 61000-3-6	Harmonic emission limits for MV networks
	IEC 61000-4-30	Power quality measurement methods
	IEEE 519	Recommended harmonic limits (THDi / THDv)
Protection & Control Communications	IEC 61850	Substation automation and SCADA communications
	Modbus TCP / RTU	Industrial communications protocol
Earthing, Bonding & Lightning Protection	SANS 10199	Earthing of substations
	SANS 10142-1	Wiring of premises – LV installations, earthing and bonding
	SANS 62305 series	Lightning protection
	IEC 61936-1	Power installations exceeding 1 kV AC
	IEEE 80	Guide for safety in AC substation grounding
Surge Protection	SANS 61643	Surge protective devices
Generator Sets (Essential Supply)	ISO 8528-1	Generator ratings and performance
	ISO 8528-5	Electrical performance
	ISO 8528-6	Installation and layout
	ISO 8528-10	Acoustic noise measurement
	ISO 8528-13	Safety requirements
	IEC 60034-1	Rotating electrical machines
Fuel Storage & Fire Protection	SANS 10089-3	Storage and distribution of petroleum products
	SANS 10400-T	Fire protection (National Building Regulations)
Electrical Enclosures	SANS 60529	Degrees of protection (IP ratings)
EMC & Environmental Conditions	SANS 61000 series	Electromagnetic compatibility
Networking & Low-Current Systems	SANS 11801	Generic structured cabling
	SANS 50600 series	Data centre facilities
Fire Detection & Alarms	SANS 10139	Fire detection and alarm systems
	EN 54 series	Fire detection and alarm components
Occupational Safety / Arc Flash	IEC 61482	Protective clothing against electric arc hazards

Operational Concept

1. Operating Philosophy

The Bitcoin mining facility shall operate as a scheduled, dispatchable electrical load rather than a fixed continuous demand.

Normal operation is planned for approximately 19 hours per day, allowing a daily non-operational window to facilitate thermal recovery of transformers, cables, and switchgear, as well as routine inspection and maintenance activities.

The mining load is fully controllable and modular, enabling rapid and predictable adjustment of demand in response to Eskom or power station operational requirements.

2. Dispatchability & Load Control Strategy

The facility shall be capable of remote and automated load control, allowing Eskom to request load increases, reductions, or full curtailment within predefined limits.

Load modulation shall be achieved through one or more of the following mechanisms:

- ASIC performance control
  - Underclocking or overclocking of miners to vary real power demand
  - Step-based load changes without electrical transients
- Container-level control
  - Switching individual mining containers on or off
  - Granular load blocks (e.g. ~1 MW per container)

The final control methodology will be confirmed during detailed design; however, the electrical infrastructure and control systems will support both approaches.

3. Load Ramping & Step Sizes

To maintain network stability and protect electrical equipment, load changes shall occur in controlled increments.

Indicative ramping philosophy:

- Load adjustment in discrete steps (e.g. 0.5–1.0 MW)
- Adjustable ramp rates (e.g. 10–20 MW per second)
- Configurable minimum and maximum load limits

This ensures:

- No sudden inrush or step-change stress on the Unit transformer
- Predictable response for grid and station operators
- Stable thermal behaviour of electrical plant

4. Eskom Interface & Command Authority

A formal load control interface shall be provided to Eskom.

This may include:

- Hardwired load setpoint commands
- Predefined load profiles (e.g. 100%, 75%, 50%, 25%, 0%)
- Emergency curtailment signal for immediate load reduction

Commands may be issued for:

- Planned system constraints
- Network contingencies
- Maintenance activities
- Emergency operating conditions

The mining facility shall execute load changes automatically, with status feedback provided to Eskom if required.

5. Automatic Protection & Self-Curtailed Operation

In addition to operator-issued commands, the facility shall implement automatic self-curtailment under predefined electrical conditions, including:

Transformer temperature or loading thresholds exceeded

- Voltage excursions
- Frequency deviations
- Protection or alarm conditions on critical equipment

In such cases, the mining load will:

- Automatically reduce output or shut down affected containers
- Prevent overloading of the Unit transformer
- Prioritise electrical system integrity over production

6. Normal Operating Schedule

Under normal system conditions:

- Mining load operates for ~19 hours per day
- Daily non-operational window used for:
    - peak hours load reduction
    - thermal recovery
    - inspections and maintenance
    - system testing

The operating schedule remains flexible and may be adjusted in coordination with Eskom to align with system demand patterns or operational constraints.

7. Benefits to Eskom and the Power Station

This operational concept provides Eskom with:

- A large, controllable industrial load
- Fast-response demand reduction capability
- Reduced continuous thermal stress on legacy plant
- Improved flexibility during peak or constrained periods

The mining facility effectively functions as a dispatchable demand resource, rather than a rigid base load.

8. Alignment with Option 1 Electrical Concept

This operational concept is specifically aligned with the Electrical Concept (Option 1), where the mining facility is supplied directly from the Unit transformer.

Key enablers include:

Centralised MV switchboard

- SCADA-integrated protection and metering
- Modular transformer and container architecture
- Clear electrical boundary between station systems and mining infrastructure

9. Operational Resourcing & Discipline

While the load is dispatchable, the facility will be managed as a continuous industrial plant. Operations will be permanently staffed 24/7 to ensure asset safety during both uptime and curtailment periods.

- **Staffing:** The site will be manned by dedicated operations personnel responsible for plant monitoring, safety compliance, and coordination with Eskom Control.
- **Operating Discipline:** The facility will adhere to standard heavy-industry operating disciplines, including formal shift handover processes, permit-to-work systems, and strict escalation protocols for abnormal events.

10. Maintenance & Asset Care Strategy

Maintenance Philosophy

Maintenance activities shall be managed using a planned, risk-based approach supported by a digital Enterprise Asset Management System (EAMS). The philosophy prioritizes preventative intervention over reactive repair to protect high-value assets and ensure reliable dispatch availability.

Asset Criticality & Prioritisation

Assets are classified based on their impact on personnel safety, environmental risk, and production continuity. This classification dictates spares holding and emergency response times.

- Class A (Critical): Immediate safety risk or production loss (e.g., HV/MV Switchgear, Transformers, Protection Relays, Fire Detection).
- Class B (High): Significant impact with limited redundancy (e.g., Dry Coolers, Dielectric Pumps, IT Networks).
- Class C (Medium**):** Localised impact (e.g., Container structures, general lighting).

Maintenance Execution

- Preventative Priority: Planned maintenance schedules shall take precedence over non-critical operational adjustments.
- Specialised Maintenance: High-voltage equipment, transformer oil analysis, and protection relay testing shall be executed by specialist contractors or OEM partners to ensure warranty compliance and certification.

Health, Safety and Legal Compliance The facility shall operate in strict accordance with the *Occupational Health and Safety Act (Act 85 of 1993)*. Key compliance pillars include:

- Permit to Work (PTW): A rigorous PTW system shall govern all high-risk activities.
- Isolation & Lockout (LOTO): Strict isolation procedures for electrical and mechanical energy sources during maintenance.
- Statutory Inspections: All pressure vessels, lifting equipment, and electrical installations shall undergo mandated periodic inspections by certified authorities.

Site Security Given the high asset value and the critical interface with the National Key Point (Grootvlei Power Station), the facility will be secured to industrial standards, including:

- Perimeter Integrity: Independent fencing and integrated CCTV monitoring.
- Access Control: Biometric or card-based access control for critical zones.
- Response Integration: Security protocols shall be aligned with the host power station's security interface to ensure coordinated response to incidents.

11. Items to be confirmed during Stage 3 design

Items to be confirmed during the stage 3 design phase:

- Final cable sizing subject to thermal resistivity survey and available cable routing
- Recent DGA and electrical tests of the identified Generator transformer and Unit transformer
- Earthing and earth mat requirements
- Structural survey of the identified cooling tower
- Required loading control capability and interfaces

12. Conclusion on operational concept

The mining facility is designed to support Eskom system stability by offering flexible, dispatchable demand, while maintaining safe and reliable operation of the Grootvlei Unit transformer and associated electrical infrastructure.

Design Parameters

This section defines the preliminary electrical design basis for the Phase 1 containerised mining deployment at Grootvlei Power Station. The parameters below are intended to be sufficiently detailed for concept viability and early procurement alignment, while recognising that final values shall be confirmed during Stage 3 (detailed design) once as-built information, protection settings and plant test data are provided/verified.

Design basis summary (Phase 1)

For the purpose of this concept design, the following design basis assumptions are adopted (to be confirmed during Stage 3):

- **Installed / dispatchable demand:** Up to 20 MW maximum dispatchable demand envelope for Phase 1. The current concept is aligned to 18 MW of mining load (18 mining containers) plus allowances for essential services and design margin.
- **Supply system:** Eskom / Grootvlei internal auxiliary network at 6.6 kV, 50 Hz, 3-phase supplied from the Unit 5 Unit Transformer (interface point subject to selected electrical option).
- **Utilisation philosophy:** The load will operate as a controllable / dispatchable demand resource, with full curtailment capability and configurable step-wise operation (refer to Operational Concept).
- **LV distribution: 400 V, 3-phase** distribution to mining containers via dedicated LV boards and feeders (exact LV architecture within each container is vendor-specific and will be finalised in Stage 3).
- **Power factor (PF):** Maintain PF ≥ 0.95 lagging at the 6.6 kV point of supply under normal operation (target near unity where practical).
- **Short-circuit levels:** Equipment fault ratings shall be selected for compatibility with the existing station fault levels (to be confirmed by Eskom). Where not yet confirmed, 6.6 kV equipment shall be selected to a minimum 25 kA (1 s) duty consistent with the draft concept equipment selections.

- **Environment:** Equipment located at/near the cooling tower base shall be suitable for a wet / high-humidity environment, including corrosion protection, appropriate IP ratings, and maintainable access arrangements.

Load characteristics

The mining load consists predominantly of high-density power electronics (ASIC power supplies) and is therefore treated as a non-linear load. The electrical design shall consider the following characteristics:

- **Modular load blocks:** The plant is inherently modular (containerised). Operationally, load modulation will be achieved through container-level enable/disable and/or ASIC performance control (under/over-clocking).
- **Step changes and ramping:** Electrical infrastructure and controls shall support controlled step changes without imposing damaging transients on the Unit transformer or station network. (Final ramp rates and step sizes to be agreed with Eskom and confirmed in Stage 3.)
- **Continuous operation limits:** The concept assumes operational scheduling that supports thermal recovery of legacy equipment (Unit transformer, cables, switchgear) while providing Eskom with a reliable dispatchable load resource.

Power quality and harmonic design requirements

Given the high proportion of non-linear loads, the electrical design shall incorporate harmonic mitigation and monitoring to ensure compliance with applicable compatibility levels and recommended limits at the point of supply.

The power quality approach shall include, but not be limited to:

1. **Harmonic compatibility targets**
    - The installation shall be designed to comply with IEC 61000 compatibility levels for industrial networks and IEEE 519 harmonic recommendations at the applicable interface.
    - Where Eskom-specific harmonic emission limits are provided for the Grootvlei 6.6 kV network, those limits will take precedence and be adopted as the final design criteria.

2. **Transformer suitability for non-linear loads**
    - Distribution transformers supplying mining containers shall be specified for non-linear load duty (e.g., suitable K-factor / harmonic-capable design, thermal margins, and appropriate winding design to manage additional losses).
    - LV distribution shall consider potential harmonic impacts on neutral conductors and busbars, subject to the final container internal distribution philosophy.
3. **Active harmonic filtering and dynamic compensation**
    - Active harmonic filters shall be installed on LV distribution boards supplying mining containers where required, sized to limit THDi and prevent excessive THDv being reflected onto the 6.6 kV system.
    - The filtering strategy shall remain compatible with dispatchable operation and varying load levels (container shedding and ASIC under/over-clocking).
4. **Power quality monitoring and verification**
    - Permanent metering shall be provided to monitor voltage, current, kW, kVA, PF and harmonics at the MV interface and at key LV incomers.
    - Stage 3 shall include a power quality verification plan, including baseline measurements (prior to energisation), commissioning measurements (initial energisation and step testing), and ongoing compliance trending during operation.

Transformer loading and thermal protection philosophy

Phase 1 assumes utilisation of the existing 20 MVA Unit 5 Unit Transformer as the primary supply source, representing the fastest implementation route by leveraging existing infrastructure while minimising new MV works.

The design shall ensure that:

- Unit transformer loading remains within acceptable thermal limits based on nameplate ratings, verified test data, and operating conditions.

- The mining load is fully controllable and able to curtail automatically and/or on Eskom instruction to protect the Unit transformer and associated station equipment.
- Thermal protection inputs (e.g., transformer temperature alarms, loading thresholds) are integrated into the load control logic such that the mining facility can rapidly reduce demand before equipment limits are exceeded.

Stage 3 studies required to finalise the above

The following engineering studies shall be completed during Stage 3 (detailed design) to confirm/optimise the design parameters:

- Short-circuit and protection coordination study (6.6 kV and 400 V)
- Load-flow / voltage drop study (including worst-case operating conditions)
- Harmonic study (THDi/THDv compliance verification at the 6.6 kV interface)
- Earthing review for connection of new equipment to the station earth system
- Confirmation of transformer condition (tests, DGA where applicable) and allowable loading profile

Plant Layout

Phase 1 implementation approach

Phase 1 (up to 20 MW dispatchable envelope) will be deployed as a containerised solution to enable fast-track installation, modular operation, and minimal interference with ongoing station activities. Later phases will be evaluated and may consist of warehoused, open-racked, or repurposed building-based deployments where suitable infrastructure exists.

Selected location: Cooling Tower 5 base slab

The Phase 1 containers are proposed to be installed on the Cooling Tower 5 reinforced concrete slab, located beneath the dry cooling tower radiators. This location is preferred for Phase 1 because it:

- Is accessible and can be executed with minimal disruption to ongoing operations
- Can be fenced and access-controlled as a defined "project area"
- Leverages an existing slab (reduced civil scope and faster implementation)
- Benefits from the natural air movement under the dry cooling tower, supporting heat rejection performance
- Enables a modular plant that can be relocated if future phases identify a more favourable permanent location

Phase 1 layout basis (container counts and grouping philosophy)

For the purposes of this concept layout, the following Phase 1 arrangement is assumed (to be confirmed during Stage 3 and final equipment selection):

- **Mining containers:** 18 × mining containers, nominally treated as ~1 MW modular blocks
- **Essential services container:** 1 × essential / control container housing SCADA/monitoring, networking, UPS, fire detection interface panels, operator workstation and small power
- **Electrical plant distributed on the slab perimeter:**

- Transformer kiosks / skids: 9 × 6.6 kV / 400 V distribution transformers (dry-type) arranged to minimise LV feeder runs and to logically group supply into manageable blocks (typical concept: one transformer supplying two mining containers)
- MV switching and isolation: RMU / MV switching equipment positioned near the MV cable entry point to the slab (final arrangement dependent on selected Electrical Concept option)

This grouping philosophy aligns the physical layout with the electrical philosophy: modular blocks that can be isolated, maintained and dispatched independently.

Spatial arrangement concept

The concept layout drawings indicate a perimeter arrangement of containerised plant on the cooling tower slab, maintaining:

- A clear central working area for access, inspection and maintenance
- Access routes between container rows suitable for routine maintenance and emergency egress
- Perimeter placement of transformer kiosks and MV equipment to keep heavy electrical plant away from high-traffic walkways and to simplify cable segregation and routing
- Separation between electrical equipment and container access points to improve safety and operational maintainability

Interfaces and constraints to consider in detailed layout

The final Stage 3 layout will be developed using Eskom as-built drawings and a site survey, and shall confirm/optimise:

- Clearances required for cooling tower maintenance access and any station operating constraints
- Container placement elevations and moisture/flood mitigation measures (refer to Civil Concept)
- Cable routing corridors (MV incoming route, LV distribution routes) and segregation requirements

- Lighting, access control and security coverage (CCTV, fencing, controlled entry)
- Emergency egress routes and safe working platforms for roof-mounted equipment (where applicable)

Future phases

Future phases may be deployed inside station halls/buildings and may reuse mothballed infrastructure where feasible (subject to verification of condition and suitability), including cooling-related equipment and piping systems as appropriate.

Concept layout drawings

The following concept layout drawings provide a preliminary visualisation of the Phase 1 deployment on the cooling tower slab. These drawings are indicative and will be converted into scaled layout drawings during Stage 3 once official cooling tower drawings and site measurement data are made available.

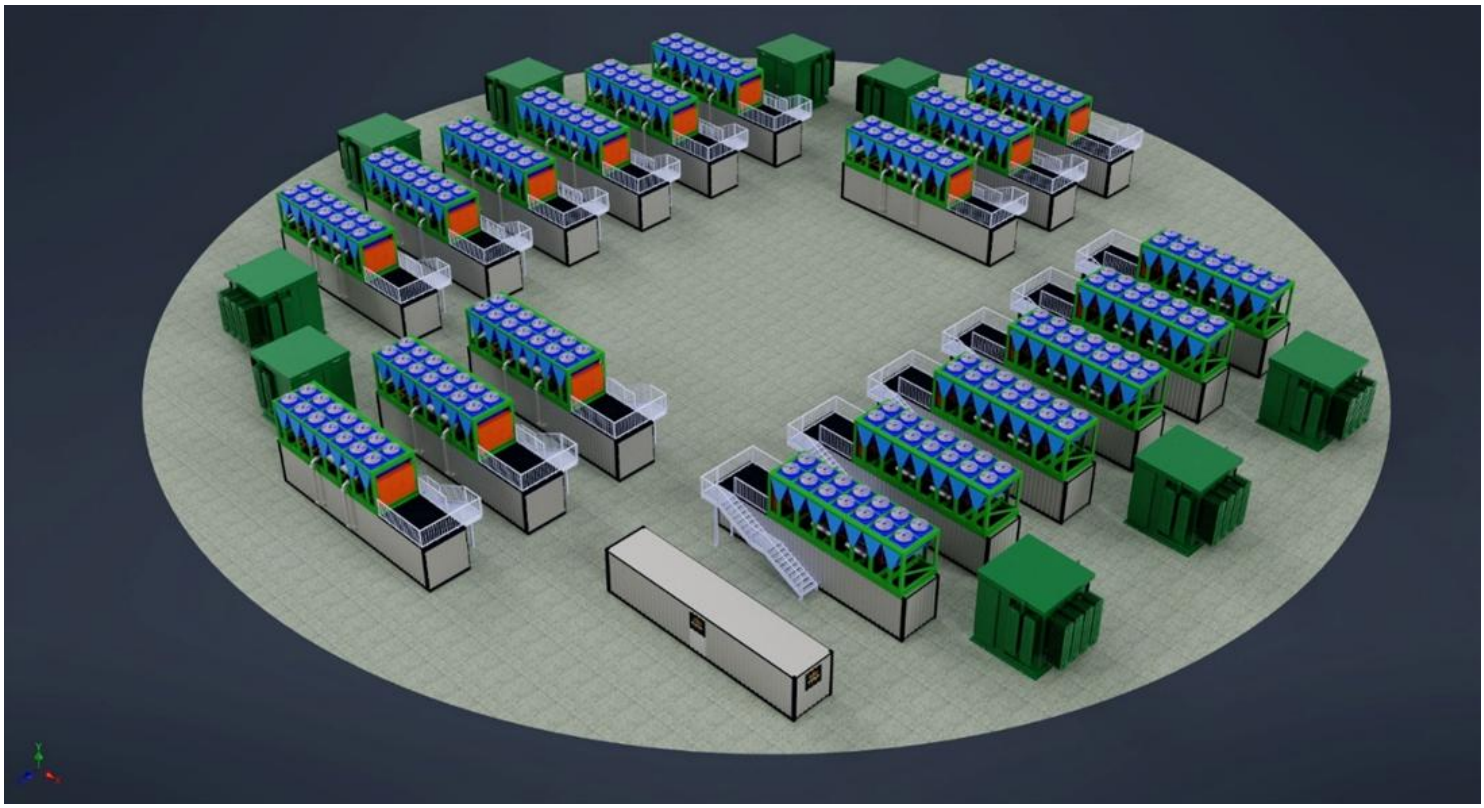

Figure 1: *Cooling Tower 5 slab; Phase 1 containerised layout concept (indicative). Transformers are illustrative*

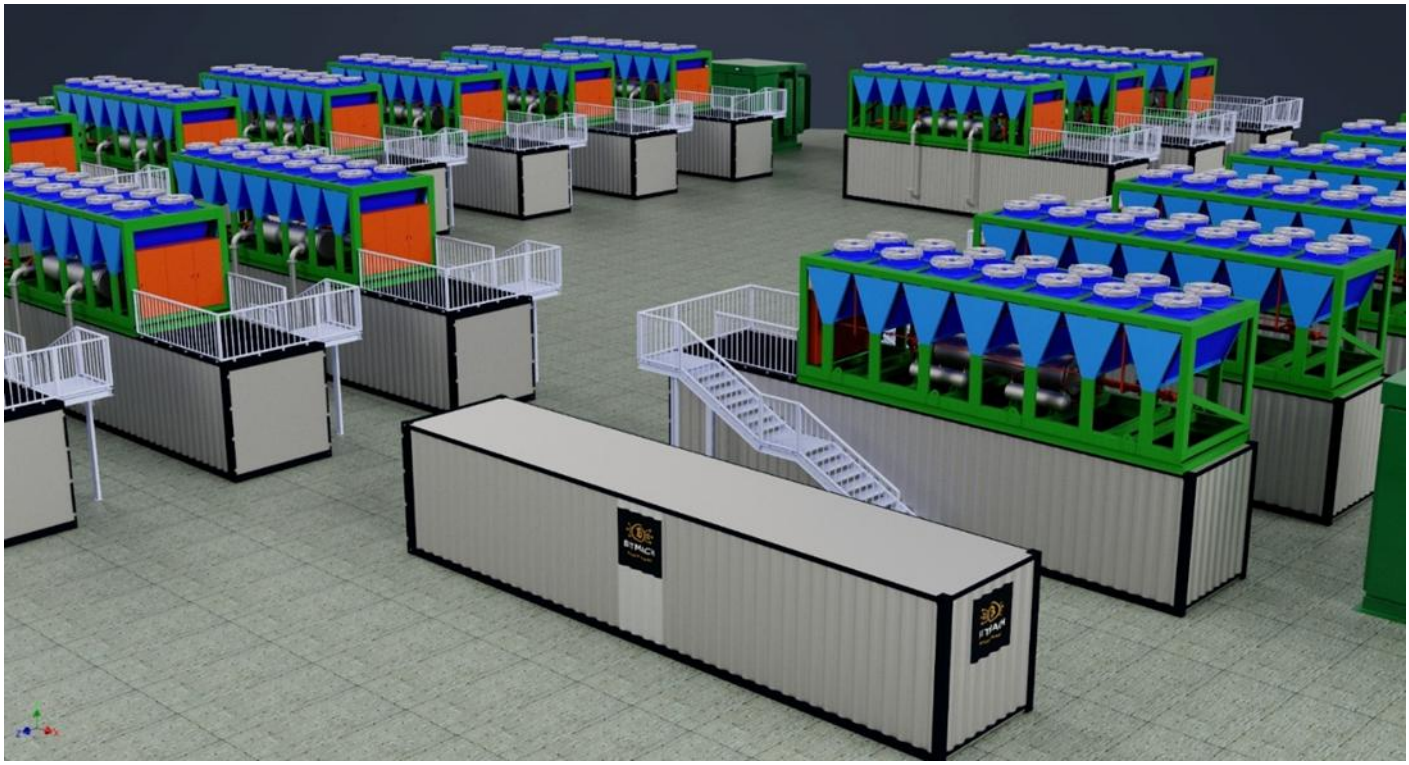

Figure 2: *Typical container arrangement on slab showing access corridors and roof-mounted cooler packages (indicative).*

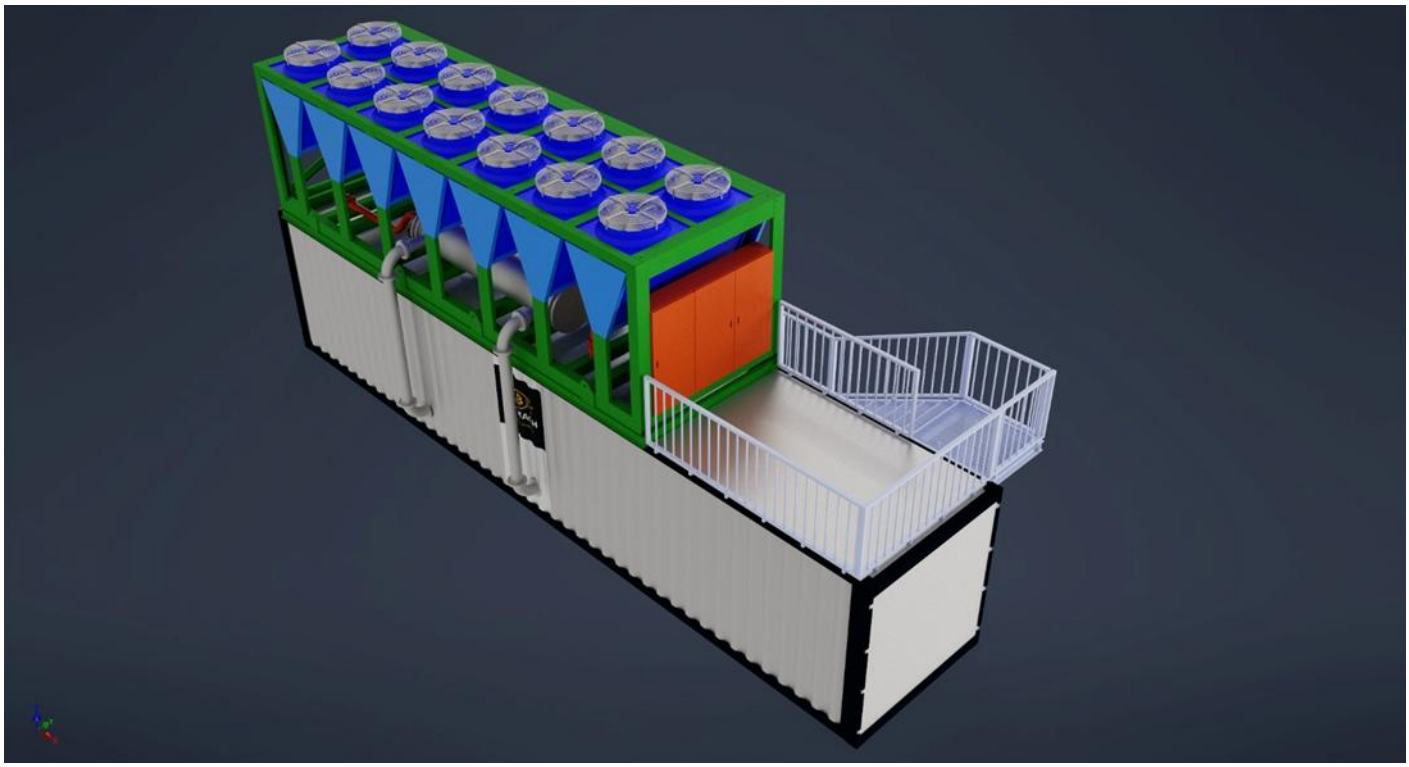

Figure 3: *Typical mining container (immersion-cooled) with roof-mounted dry cooler module and access platform/stair arrangement (indicative)*

Electrical Concept

The electrical concept has been developed to enable rapid deployment of a dispatchable (curtailable) mining load at Grootvlei Power Station, while minimising modifications to Eskom's existing generation auxiliary reticulation and ensuring clear demarcation of responsibilities at the point of connection (POC).

The concept is presented as two interface options as requested by Eskom:

- Option A (Preferred): Three existing 630 A feeders at 6.6 kV feeding an onsite 6.6 kV ring / switching station at the dry cooling tower slab.
- Option B (Alternative / cleaner interface): A single 2000 A incomer / full 20 MVA feed from the unit transformer LV (6.6 kV) to a dedicated customer 6.6 kV board.

1. Electrical Design Basis and Key Assumptions (To Be Confirmed During Basic Design)

Unless otherwise stated, the following preliminary assumptions apply:

- Supply system: 6.6 kV, 50 Hz, 3-phase, solidly-earthed / impedance-earthed per station practice (to be confirmed by Eskom).
- Source: Unit transformer associated with the selected unit(s), nominal 20 MVA, stepping down from the generator bus to 6.6 kV unit auxiliary system.
- Phase 1 installed mining load: nominally 18–20 MW dispatchable load, configured as modular containerised blocks (nominal 1 MW per container). Final MW and number of containers may be adjusted to balance feeders and remain within unit transformer and feeder thermal limits.
- Container electrical characteristics (preliminary):
  - Supply voltage: 400 V AC, 3-phase (unless vendor final requires 415 V/480 V; to be confirmed).

  - Power factor: ≥ 0.98 at rated load (typical for PFC rectifier front ends).
  - Load ramping: mining load can be staged (container-by-container and/or rack-by-rack) to avoid step changes on the network.
- Estimated cable route length (unit board to cooling tower slab): ~1000 m (to be verified by survey and confirmed routing).
- Fault levels: indicative station 6.6 kV fault level to be confirmed by Eskom (preliminary values in earlier sketches indicate ~11–15.5 kA 3-phase symmetrical at relevant 6.6 kV buses). These values will be validated and used for final equipment short-circuit ratings.
- Total demand limit: the Bitmach facility operating setpoint will be controlled to remain within the agreed capacity limit on the applicable unit transformer and feeders, including transformer losses and auxiliary loads.
- All MV/LV equipment to comply with applicable IEC/SANS and Eskom requirements as listed in the Standards section of this report. Where Eskom specifications differ, Eskom requirements shall take precedence.

2. Point of Connection and Demarcation

The point of connection (POC) is defined differently for Option A and Option B:

Option A (Preferred):

- POC at the outgoing cable termination point of each selected existing 6.6 kV feeder cubicle on the Eskom unit/boiler board(s) (i.e., on the load side of the feeder circuit breaker).
- Eskom scope (typical): existing feeder circuit breaker, existing feeder protection, station-side interlocks, upstream busbar, unit transformer and upstream generation auxiliaries.
- Bitmach scope (typical): outgoing MV cable(s) from Eskom feeder cubicles, onsite 6.6 kV switching station / ring, onsite transformer substations, LV reticulation to containers, internal load control and protection downstream of the POC.

Option B (Alternative):

- POC at the outgoing side of the unit transformer 6.6 kV terminals / cable box / dedicated customer incomer (as agreed with Eskom).
- Eskom scope (typical): unit transformer and upstream, and any station-owned switchgear feeding the POC.
- Bitmach scope (typical): dedicated customer 6.6 kV board, all downstream MV/LV reticulation and mining plant.

Note: final demarcation, metering boundary and required CT/VT arrangements will be confirmed with Eskom DX Metering and the relevant GX engineering authority.

3. Load Summary and Feeder Allocation (Preliminary)

The Phase 1 mining plant is modular and the electrical reticulation will be configured in discrete legs such that the loss of a single feeder does not force overload on remaining feeders.

Typical allocation targets are:

- 18 MW installed case: 6 containers per feeder across 3 feeders (6 + 6 + 6).
- 20 MW installed case: 7 + 7 + 6 containers across 3 feeders.

A preliminary load allowance is provided below:

- Mining containers: 18–20 MW (dispatchable)
- Essential / controls / comms / lighting / security: 50–150 kW (non-dispatchable essential load, subject to final design)
- Allowance for transformer and cable losses: 1.5–3% of mining load

During Basic Design, a formal load schedule will be issued showing:

- container name/number, kW rating, supply voltage, full-load current, diversity factor
- essential and auxiliary loads list
- feeder allocation and balancing

4. Option A (Preferred): 3 × 630 A 6.6 kV Feeders to Onsite 6.6 kV Ring / Switching Station

4.1 Overall Arrangement

Option A utilises three existing 630 A, 6.6 kV feeder breakers on the unit and/or boiler boards (as agreed with Eskom) to supply the mining site via three independent MV circuits. These circuits terminate at an onsite 6.6 kV switching station located adjacent to the dry cooling tower slab.

The onsite switching station performs the following functions:

- Provides a clear customer-side isolation point and safe switching boundary.
- Allows sectionalisation of the mining reticulation so faults can be isolated without impacting the full site.
- Supports ring/radial reconfiguration (normally-open points) for operational flexibility.
- Hosts customer metering (as specified by Eskom DX) and operational metering for dispatch.

4.2 MV Cabling (Unit Board to Switching Station)

- MV cables: screened XLPE-insulated MV cables suitable for 6.6 kV systems (e.g., 6.35/11 kV rated), copper conductors, armoured where required, installed on existing cable racks/trays/trenches with extensions as required.
- Preliminary rating basis: each circuit designed for continuous duty up to the feeder rating (630 A), including installation derating, grouping, ambient temperature and route conditions.
- Screen bonding and earthing: to be engineered (single-point or cross-bonding) to control sheath losses and induced voltages over the route length.
- Preliminary sizing suggests 3 x single-core 500 mm² Cu for the main feeders and 150 mm² for transformer tails, subject to thermal rating verification

Final cable sizes and installation method will be confirmed by detailed routing, thermal rating study and voltage drop calculation.

4.3 Onsite 6.6 kV Switching Station / Ring

Two practical implementation variants are acceptable at concept level (final selection in Basic Design):

Variant A1: Metal-clad MV Switchboard (recommended where multiple outgoing feeders are required)

- 6.6 kV metal-clad switchboard rated for at least 12 kV insulation level, minimum 25 kA short-circuit withstand (3 s) (or as per Eskom fault-level confirmation), internal arc classification where feasible.
- Incomers: three incoming VCB panels (one per Eskom feeder circuit) each with protection relay, metering CTs/VTs as required, and remote trip capability.
- Busbar: sectionalised bus with bus-coupler panel to allow operational segregation of legs and controlled reconfiguration (normally-open operating philosophy where required).
- Outgoing feeders: multiple feeder panels supplying transformer substations / RMUs distributed along the slab.

Variant A2: Multiple RMUs (one per feeder leg) with sectionalising points

- Each 630 A incoming circuit terminates into its own RMU (630 A rated) forming an independent leg.
- Additional RMUs provide sectionalising along the slab to create a normally-open ring structure for resilience and maintenance.
- This variant is compact and fast to deploy but must be carefully designed to ensure adequate protection discrimination and future expandability.

4.4 MV-to-LV Transformers and LV Reticulation Philosophy

Transformers will step down from 6.6 kV to LV distribution for container supplies. The transformer strategy is selected to balance:

- LV fault level / availability of standard LV switchgear
- modularity and redundancy
- procurement lead time and constructability

Two transformer sizing patterns are considered:

Pattern P1 (preferred for standard LV fault levels and modularity):

- Multiple 1.25 MVA transformers (6.6/0.4 kV), each feeding one mining container (nominal 1 MW) with headroom.
- Typical LV full load current per transformer ≈ 1800 A at 400 V.
- LV fault level is significantly lower than a 2.5 MVA transformer (subject to transformer impedance), enabling use of standard LV breaker ratings.

Pattern P2 (reduced transformer count, higher LV fault duty):

- 2.5 MVA transformers (6.6/0.4 kV), each feeding one or two containers.
- Typical LV full load current per transformer ≈ 3600 A at 400 V.
- LV fault levels may approach ~60 kA for 6% impedance transformers (single transformer basis), requiring higher-rated LV switchgear and careful discrimination.

Final selection (P1 vs P2 or a hybrid mix) will be confirmed by:

- detailed short circuit study (including worst-case source contribution)
- LV equipment rating availability and cost
- operational preference for redundancy and maintainability

LV Distribution Architecture (applies to either pattern):

- Each transformer shall feed a dedicated LV distribution board (not a common paralleled LV bus across multiple transformers unless specifically engineered for paralleling, fault level, protection coordination, and operational synchronisation).
- Each mining container shall be fed by a dedicated LV feeder with isolation and protection (MCCB or ACB as appropriate), and local lockable isolation adjacent to the container.
- Feeder cables will be sized for continuous duty and voltage drop, installed in cable trays, trenches or purpose-built supports above flood-risk level.

- Surge protection devices (SPDs) and earthing/bonding will be applied per SANS/IEC and OEM requirements.

4.5 Protection Philosophy (Concept Level)

Protection must ensure that:

- faults on the Bitmach side are cleared quickly and selectively without causing unnecessary station trips
- equipment is adequately protected from overload, earth faults and abnormal voltage/frequency conditions

Preferred MV protection approach (Variant A1 switchboard):

- Incomer protection (each 630 A incoming circuit):
  - Phase overcurrent and earth fault (50/51, 50N/51N)
  - Under/over-voltage (27/59) where required
  - Under/over-frequency (81) where required
  - Thermal overload (49) as appropriate
  - Breaker failure (50BF) where applicable
  - Remote trip input(s) for Eskom operational requirements (intertripping / load shedding interface to be defined)
- Feeder protection (outgoing transformer feeders):
  - Phase overcurrent and earth fault (50/51, 50N/51N)
  - Thermal overload (49) as appropriate
- Transformer protection:
  - MV side: via feeder protection or fused switch protection depending on final design
  - LV side: main breaker with LSIG or equivalent functionality, plus transformer temperature monitoring (winding temperature sensors, alarms and trip)

Where RMU fused feeders are used, fuse selection and coordination must be engineered to ensure adequate discrimination and to avoid nuisance operations during inrush and switching.

4.6 Metering (Commercial and Operational)

- Commercial metering: to be installed at the agreed metering boundary per Eskom DX requirements. Metering accuracy class, CT ratios, VT requirements, and communications protocol will be confirmed by Eskom.
- Operational metering: multi-function meters at switching station and/or per feeder leg, logging kW, kWh, kvar, power factor, voltage, current, THD (if required), and event logs to support dispatch performance and troubleshooting.
- Container-level metering: recommended at each container feeder to enable precise MW dispatch and performance reporting.
- Metering will comply with IEC 62052-11 and IEC 62053-21 (Class 1 or 0.5S), with communications via IEC 61850 or Modbus as required."

4.7 Advantages / Disadvantages (Option A)

Advantages:

- Utilises existing 6.6 kV feeder infrastructure with minimal intrusive modifications inside the power station.
- Modular: faults or maintenance on one feeder leg can be isolated without total site outage.
- Scalable: additional feeders and/or transformer clusters can be added subject to station capacity and approvals.
- Clear customer-side isolation at the onsite switching station.

Disadvantages / Constraints:

- Requires confirmation of feeder availability, breaker health, and station busbar/cable capacity for sustained loading.
- Requires cable rack/trench capacity assessment and likely rack extensions to accommodate additional MV cables.
- Requires careful protection coordination between Eskom feeder protection and customer-side protection to ensure selectivity.
- Unit transformer loading and condition must be confirmed; operational setpoint control required to avoid overload risk.

5. Option B (Alternative): 2000 A Incomer / Direct 20 MVA Feed to Dedicated Customer 6.6 kV Board

5.1 Overall Arrangement

Option B provides a single “clean” customer interface by taking the full unit transformer 6.6 kV output (up to ~20 MVA) through a dedicated 2000 A incomer to a customer-owned 6.6 kV distribution board. From this board, multiple outgoing feeders supply the onsite ring / transformer clusters in a similar manner to Option A.

5.2 MV Supply Cable and Customer MV Board

- Connection point: unit transformer LV terminals / cable box / dedicated incomer as agreed with Eskom.
- MV supply conductors: multiple parallel MV cable runs (single-core per phase) sized to carry the full facility current (order of 1750–1800 A at 6.6 kV for ~20 MVA), subject to installation derating and route conditions.
- Customer 6.6 kV board:
  - 12 kV insulation level (typical)
  - short-circuit rating based on confirmed fault level (minimum 25 kA 3 s as preliminary)
  - incomer protection, busbar protection philosophy and outgoing feeder protection as per Basic Design studies

5.3 Advantages / Disadvantages (Option B)

Advantages:

- Cleanest demarcation between Eskom station reticulation and customer reticulation (single interface point).
- Fewer Eskom boards/cubicles involved; potentially simpler operational responsibility split.
- Better suited for structured expansion and for a “customer substation” model.

Disadvantages / Constraints:

- Feasibility dependent on Eskom isolations, preservation loads still energised on unit boards, and the ability to dedicate the unit transformer output to the customer leg.
- Larger single-circuit consequence (single incomer outage impacts full facility unless redundancy is engineered).
- Potentially more intrusive station modifications and more stringent outage planning to establish the interface.

6. Essential Supply (Common to Option A and Option B)

An essential supply is required for:

- control and communications
- metering and network equipment
- security systems
- safe lighting and basic auxiliaries required for orderly shutdown / restart
- Battery Tripping Unit (BTU)

Concept arrangement:

- Dedicated essential LV transformer (e.g., 6.6/0.4 kV, ~100 kVA class, to be confirmed)
- Essential LV distribution board
- UPS for critical ICT and control loads (e.g., 10 kVA class, to be confirmed) providing ride-through during switching events
- Standby generator (e.g., ~100 kVA class, to be confirmed) with an automatic transfer switch (ATS) for extended outages
- Generator earthing and changeover arrangements to comply with SANS requirements (neutral/earth management and interlocking)
- Installation, earthing, and bonding shall comply with SANS 10142-1 and SANS 10400-T. The diesel generator set shall comply with ISO 8528 and IEC 60034-1, with fuel storage in accordance with SANS 10089-3.

7. Studies and Deliverables Required to Finalise Basic Design

To progress from concept to basic design, the following will be produced:

- Confirmed load schedule (containers + auxiliaries + losses) and feeder allocation
- Cable routing survey, distances, and installation method definition (rack/trench/duct)
- MV cable thermal rating and voltage drop calculations
- MV/LV short circuit study (including worst-case source fault level)
- Protection grading and discrimination study (Eskom feeder protection vs customer protection)
- LV switchgear rating confirmation and arc flash hazard assessment
- Earthing design and step/touch potential assessment; bonding of containers and metallic structures
- Power quality / harmonic assessment based on final mining power supply characteristics
- Updated single line diagrams reflecting final selected option and distribution architecture (including the onsite switching station and transformer clustering)

Figures

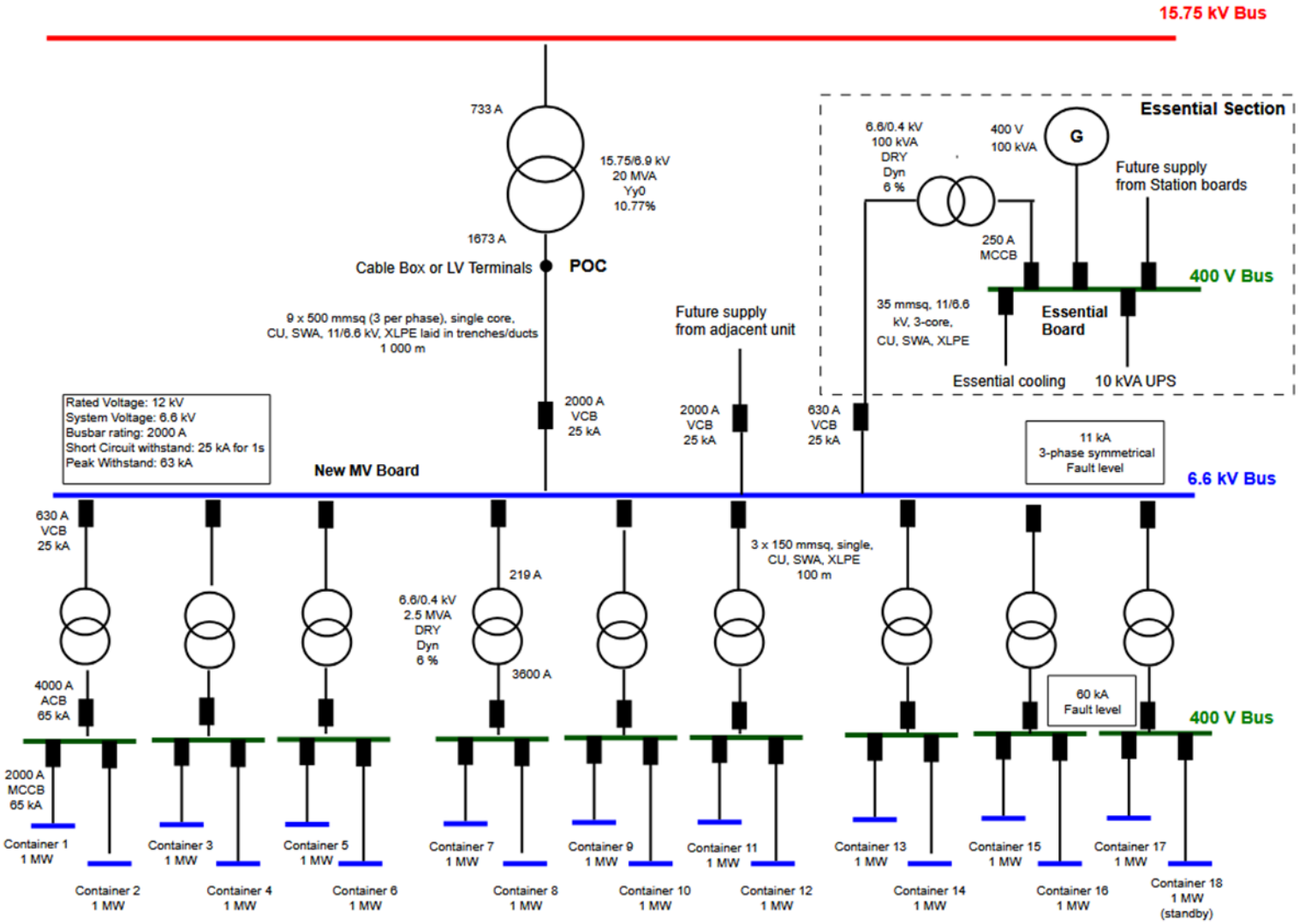

Figure 1. Single Line Diagram (SLD) for proposed Option B (2000 A incomer / direct 20 MVA feed to customer 6.6 kV board) – concept level

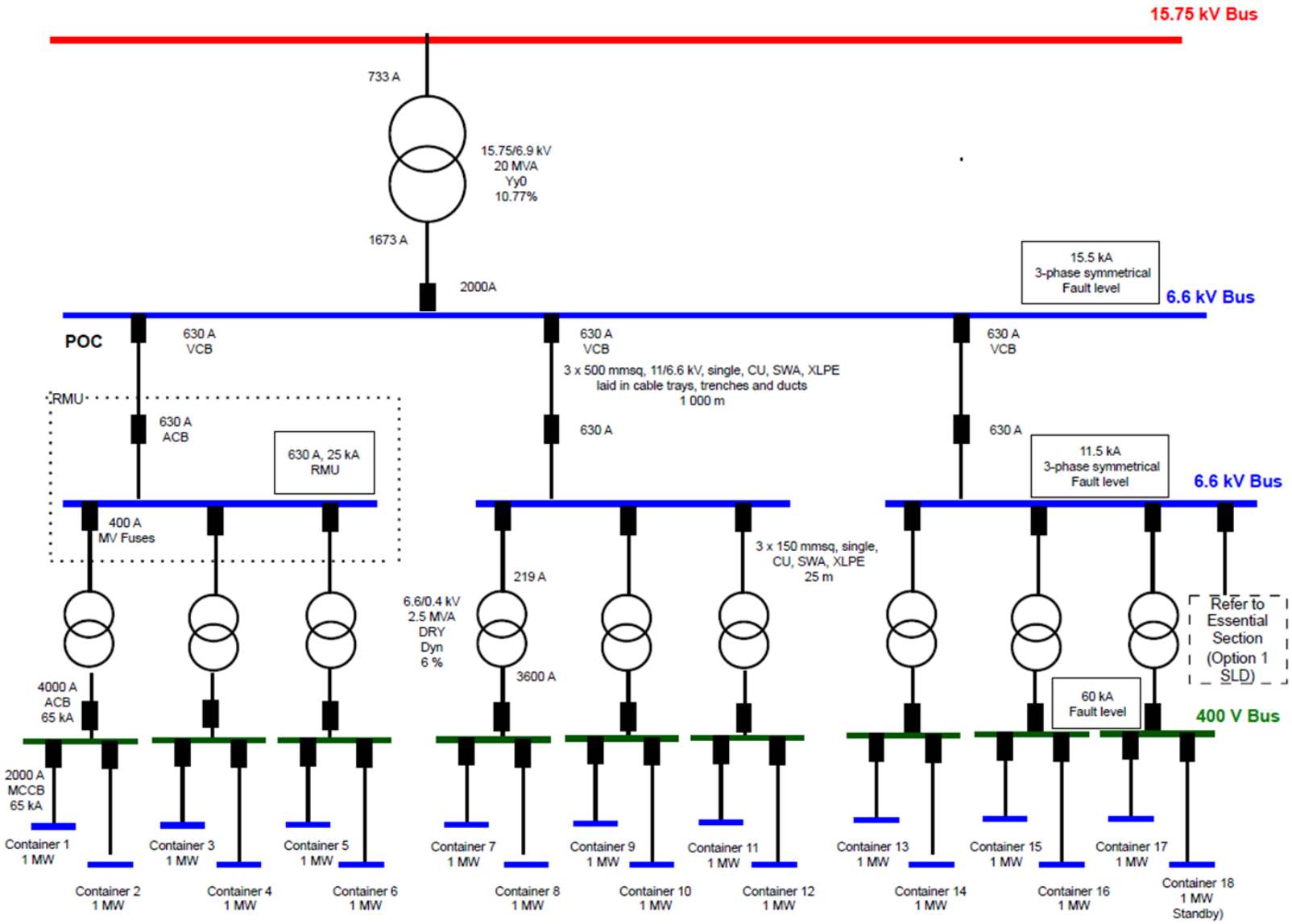

Figure 2. Single Line Diagram (SLD) for proposed Option A (three 630 A feeders to onsite 6.6 kV switching station / ring) – concept level.

Process Concept

The mining facility will utilise single-phase immersion-cooled (submerged) ASIC mining containers, where mining hardware is fully submerged in a non-conductive dielectric fluid for thermal management. The immersion approach provides stable ASIC operating temperatures, significantly reduces dust ingress compared to air-cooled systems, and supports modular, dispatchable operation aligned with Eskom operating requirements.

Process design basis (preliminary – to be confirmed during Stage 3)

- **Container block size**: The facility is designed around modular load blocks (containers). Each container is treated as a dispatchable block with a nominal 1 MW electrical IT load. Final maximum kW per container shall be confirmed once the ASIC and PSU selection is finalised.
- **Thermal duty:** Approximately 95–100% of electrical input power ultimately becomes heat. Cooling shall therefore be sized for approximately 1 MW thermal rejection per container at full IT load, plus auxiliary losses.
- **Heat rejection**: Heat is rejected to ambient air via dry coolers / radiators (air-cooled). No process water consumption is required; any coolant circuits used are closed-loop with no routine discharge.
- **Ambient conditions**: Cooling equipment shall be sized for local Mpumalanga climatic conditions. Final design dry-bulb temperatures and seasonal extremes shall be confirmed using site meteorological data and OEM requirements.
- **Dielectric fluid**: The selected dielectric fluid shall be OEM-approved, chemically stable, non-conductive, and compatible with seals, hoses, metals, and coatings used. Fluid selection shall also consider environmental performance (spill response, handling, and disposal) and insurer requirements.

Container process configuration

Each container functions as a self-contained process unit comprising:

- Immersion tanks housing ASIC miners
- Dielectric cooling fluid
- Circulation pumps (duty/standby where feasible)
- Heat rejection equipment (radiators / dry coolers with forced-draft fans) mounted externally to the container structure
- Piping manifolds, isolation valves, strainers/filters, and an expansion/degassing arrangement for fluid management
- Local control panels and instrumentation

Process flow description

The process flow is as follows:

1. Electrical power is supplied to each container via a dedicated LV feeder and container incomer.
2. ASIC miners convert electrical energy into computational output and heat.
3. Heat is absorbed directly by the dielectric fluid surrounding the miners.
4. Circulation pumps transport heated dielectric fluid from the immersion tanks through the heat rejection circuit.
5. Heat is rejected to ambient air through radiators / dry coolers.
6. Cooled dielectric fluid returns to the immersion tanks to repeat the cycle.

Operating modes and dispatch interaction

- Start-up: Cooling pumps and fans establish stable circulation and temperature control prior to energising miners. Miners are then ramped up in discrete steps in line with the dispatch/ramping philosophy.
- Normal operation: Closed-loop operation at a controlled thermal operating point. Pump and fan speeds may be modulated to maintain target dielectric supply temperature and optimise auxiliary power.
- Curtailment / underclocking: Reduction in miner load reduces heat duty. Cooling control automatically adjusts pump/fan speed accordingly. The thermal system is therefore inherently compatible with partial-load operation.
- Trip / emergency shutdown: For critical alarms (e.g., loss of flow, high dielectric temperature, electrical protection trips, or detected leaks), miners are tripped to a safe state (zero load), and cooling systems execute

an orderly shutdown or continue run-on cooling as required by OEM guidance.

Process instrumentation, monitoring and alarms (minimum per container)

- Dielectric temperature – supply and return (with high-high trip setpoint to protect miners and prevent overheating)
- Flow indication / flow switch on main circulation loop
- Pump status (run/fault) and VSD feedback where applicable
- Fan status and speed feedback where applicable
- Expansion tank / reservoir level (low-level alarm)
- Filter differential pressure (maintenance alarm)
- Leak detection within secondary containment or drip trays
- Local alarms and trips integrated into the central monitoring/SCADA system

Environmental and housekeeping philosophy

- The dielectric fluid system is closed-loop and designed to prevent any discharge to the cooling tower pond or surrounding environment.
- Filling, draining, and sampling points shall be valved, labelled, and positioned to support safe operation and spill control.
- Secondary containment provisions shall capture credible leaks/spills and allow controlled clean-up and disposal in accordance with approved procedures.

Mechanical Concept

The mechanical design is centred around reliable, maintainable, single-phase immersion cooling systems optimised for high-density ASIC loads. The mechanical scope is modular and repeats per container to align with the electrical dispatch philosophy (container-level load blocks).

Mechanical design basis (preliminary – to be confirmed during Stage 3)

- Continuous thermal duty: 1 MW thermal rejection per container at full IT load.
- Redundancy and fail-safe behaviour: Critical cooling elements shall be configured such that loss of a single item does not cause uncontrolled overheating. Where practical, N+1 redundancy shall be applied (e.g., standby pump). Where redundancy is not practical, protection interlocks shall trip miners on loss of cooling.
- Maintainability: Components shall be accessible for routine inspection and replacement. Isolation valves and modular components shall be used to reduce downtime.
- Environmental suitability: Equipment shall be suitable for wet outdoor conditions at the cooling tower slab, including corrosion protection, appropriate enclosure protection (IP rating), and mechanically protected pipework.

Key mechanical elements (per container)

- Immersion tanks fabricated from corrosion-resistant materials, designed for safe access, lifting, and maintenance.
- Dielectric fluid compliant with OEM requirements and selected with appropriate environmental and safety characteristics.
- Variable-speed circulation pumps with duty/standby arrangement where feasible.
- Heat rejection equipment (radiators / dry coolers) sized for worst-case ambient conditions, using forced-draft fans and designed for stable operation at partial loads.

- Expansion/degassing provision to accommodate thermal expansion and maintain fluid quality.
- Filtration/strainers to protect pumps and maintain fluid cleanliness, including differential pressure indication for maintenance.

Monitoring and protection

- Pumps and heat rejection equipment shall be monitored for flow, temperature, operating status, and alarms.
- Cooling controls shall tolerate and remain stable during underclocking/curtailment, including transitions between load levels.
- Critical alarms (loss of flow, high temperature, low fluid level, etc.) shall initiate safe shutdown of miners and provide alarm indication to the central monitoring system.

Auxiliary loads (for electrical sizing and Eskom reporting)

Eskom requested visibility of auxiliary and ancillary loads beyond the miners. At this concept stage, the following preliminary allowances are proposed per 1 MW container (subject to confirmation from OEM datasheets during Stage 3):

- Dry cooler / radiator fans: 15–40 kW per container
- Circulation pumps: 5–15 kW per container
- Local control / instrumentation / small power: 1–3 kW per container
- Indicative auxiliary total: 20–60 kW per container (≈2–6% of IT load). The final auxiliary load schedule will be issued as part of the Stage 3 detailed design.

Noise

Noise is generated primarily by the dry cooler fan systems. The design will incorporate fan speed control and low-noise selections where feasible. Noise levels will be verified post-installation to confirm compliance with station requirements.

Civil Concept

The mining containers shall be installed on the existing reinforced concrete slab at the base of the cooling tower, subject to detailed survey and structural verification. Given the location within the cooling tower pond area and the potential for high groundwater levels, standing water, and extreme rainfall events, the installation shall be designed as an elevated, “dry island” arrangement to mitigate flood and moisture-related risks.

Civil design basis

- Protection of electrical and mechanical equipment from water ingress
- Safe and reliable personnel access in wet conditions
- Minimal interference with existing cooling tower structures and station access routes
- Rapid constructability using prefabricated / modular works
- Environmental protection to prevent contamination of the cooling tower pond
- Provision for site security measures (fencing, controlled access and lighting) where required by Eskom/site security protocols

Site survey and as-built confirmation (required before final civil detailing)

- Confirm available footprint, container spacing, and maintenance access routes
- Confirm slab levels, existing drainage paths, and any penetrations/services
- Confirm lifting/crane access and laydown area for installation
- Confirm cable routing corridors and interfaces to existing structures
- Structural assessment
- Verification of the slab’s load-bearing capacity for container dead loads (including miners, tanks, dielectric fluid, radiators and ancillary equipment), live loads, and dynamic equipment loads
- Assessment of point loads introduced by container support frames or plinths (including punching shear checks)
- Localised strengthening or load spreading measures where required

Container elevation and supports

- Containers shall be mounted on steel support frames (hot-dip galvanised) or concrete plinths to raise the container base above anticipated water levels.
- Minimum elevation height shall be confirmed during Stage 3 based on flood risk assessment, historical rainfall data, and a site drainage study.
- Elevated design shall allow free drainage and visual inspection beneath containers and prevent standing water contacting LV boards, cable terminations, and mechanical equipment.

Anchoring and stability

- Containers and support structures shall be securely anchored to resist wind loads and operational vibrations.
- Anchor design shall be compatible with the existing slab reinforcement layout (to be confirmed by survey) and shall not compromise slab integrity.
- Corrosion-resistant materials and coatings shall be used due to the wet and potentially aggressive environment.

Cable routing interfaces (MV/LV/control)

- Dedicated routes shall be established for MV and LV cables between station supply points and the cooling tower slab area.
- Where practical, cable routes shall be raised above known water levels on racks/trays, with mechanical protection and segregation between MV, LV and control/communications cabling.
- Any trenching/ducting works (if required) shall include drainage provisions, appropriate bedding/backfill, warning tape, and reinstatement suitable for the wet environment.

Walkways and access

- Permanent raised walkways shall be provided between containers and from access points to ensure safe personnel movement.
- Walkways shall be:
  - Non-slip grating or treated concrete
  - Fitted with handrails and toe-boards where required

    - Designed to remain serviceable under wet conditions
- Walkways shall allow safe access for:
    - Routine inspections
    - Maintenance activities
    - Emergency egress
- Emergency egress routes shall be clearly defined and aligned with Eskom site procedures.

Drainage and water management

- Drainage provisions shall be implemented to prevent water accumulation beneath and around containers.
- Natural drainage paths shall not be obstructed.
- Local grading, channels, or sumps may be introduced where necessary to direct water away from equipment and maintain a dry working area.

Environmental protection

- Bunding, drip trays, or secondary containment shall be provided where required to manage potential dielectric fluid leaks.
- Measures shall be implemented to prevent contamination of the cooling tower pond, including spill response arrangements and controlled disposal procedures for contaminated materials.

Constructability

The civil design philosophy prioritises minimal new construction, prefabricated support structures, and rapid installation, aligning with the fast-track deployment objective while ensuring long-term operational robustness in a wet environment.

Control and Indication Concept

A centralised control philosophy shall be implemented to support dispatchable load operation.

Control architecture

- Container-level PLC or industrial controller
- Central SCADA system interfaced with:
    - MV switchgear
    - Transformers
    - LV distribution
    - Essential power systems (Essential board, Diesel generator, UPS and batteries)
    - Cooling systems
    - ASIC management platforms

Control functions include:

- Start/stop of individual containers
- ASIC underclocking and overclocking commands
- Real-time monitoring of:
    - Power (kW, kVA, PF)
    - Temperatures (fluid in/out, ASIC)
    - Pump status
    - Alarms and trips
- Automated response to Eskom load curtailment signals
- Emergency shutdown capability

Indications provided locally and remotely include:

- Container status (Running / Stopped / Alarm)
- Electrical loading
- Cooling system health
- Communication status

Network Architecture (IT & OT)

The network design separates Operational Technology (OT) from Information Technology (IT) to ensure security and reliability.

Network layers:

- **OT Network**
  - MV/LV protection relays
  - Power meters
  - PLCs
  - Cooling system controllers
- **Mining Network**
  - ASIC miners
  - Mining pool connectivity
- **SCADA / Monitoring Network**
  - Central monitoring
  - Eskom interface
  - Data logging and reporting

Links shall be provided between containers and the central control room. Firewalls and VLAN segregation will be implemented to isolate critical systems.

Communications protocols include:

- Modbus TCP/IP
- IEC 61850 (where applicable)
- SNMP for device health monitoring

Fire Detection

Although immersion-cooled systems significantly reduce fire risk, appropriate detection and mitigation measures shall be provided.

Fire safety philosophy:

- Early detection rather than suppression
- Prevention through thermal and electrical monitoring

Fire detection measures include:

- Aspirating smoke detection (VESDA) where applicable
- Temperature monitoring within containers

- Electrical fault detection via protection relays
- Alarm integration into SCADA

Given the non-flammable nature of most dielectric fluids, conventional gaseous suppression systems are generally not required; however, final fire strategy shall be confirmed during detailed design in consultation with insurers and authorities.

Conclusion

This Stage 2 Concept Design demonstrates the technical viability of deploying a fast-track, modular and immersion-cooled Bitcoin mining facility at Grootvlei Power Station as a dispatchable demand resource. The Phase 1 deployment is envisaged as an initial ±18 MW mining payload (18 containerised mining rigs) plus an essential services container and auxiliary loads, with the overall electrical interface sized for a nominal 20 MW facility in line with the proposed connection capacity and Eskom's operational requirements.

The concept is intentionally based on re-use of existing station infrastructure while establishing a clear electrical demarcation between Eskom-owned assets and customer-owned assets. The proposed power supply is via the existing Unit 5 unit transformer and 6.6 kV interface, with two electrical connection concepts presented to support Eskom's preferred point-of-connection and demarcation philosophy:

- Option 1: A direct 6.6 kV supply from the Unit transformer LV terminals/cable box to a dedicated customer medium-voltage board, feeding multiple LV transformer supplies and container feeders.
- Option 2: A 6.6 kV supply via existing 630 A feeder circuits on the unit/boiler boards, feeding an outdoor RMU/switching arrangement and distributed LV transformer supplies at the cooling tower slab.

Both options retain a modular downstream architecture to enable staged commissioning, container-level isolation, and phased expansion without material rework.

From a process and mechanical perspective, the immersion-cooled container solution provides high thermal stability, improved equipment protection from airborne contamination, and reduced noise compared to conventional air-cooled mining. Each container operates as an independent ~1 MW block with dedicated LV supply, local control and instrumentation, supporting precise load control, fast curtailment, and selective maintenance isolation.

The civil concept supports rapid constructability by locating the mining plant on the existing reinforced concrete slab at the base of the cooling tower, subject to detailed structural verification. Recognising the wet environment and flood/standing-water risk in the cooling tower pond area, the concept includes elevating containers above slab level, implementing practical access provisions, and incorporating containment measures to protect the surrounding environment.

The operating philosophy is based on a scheduled, dispatchable load profile rather than continuous fixed demand. The facility is designed for remote and automated load modulation to respond to Eskom or station requirements, supported by SCADA monitoring, container-level controllers and protection-based self-curtailment. A segregated IT/OT network architecture is proposed to maintain cybersecurity and operational reliability, with appropriate event/alarm integration to support safe operation. Fire detection is addressed through early detection and alarm integration, recognising the reduced inherent fire risk associated with immersion systems, while still ensuring that electrical equipment spaces and transformers are monitored and appropriately protected.

This concept design is intended to support Eskom's feasibility review and governance decision-making and to be matured into a Stage 3 "basic / detailed design" package. The Stage 3 design development will confirm and finalise, at minimum:

- Point of connection, demarcation and metering arrangement (including CT/meter class, location and compliance with DX metering requirements);
- Verification of unit transformer and switching equipment condition, usable ratings and reliability considerations (including required inspections and test records);
- Confirmed cable routing, distances, installation method and final cable sizing (including voltage drop and thermal constraints);
- Fault level calculations, protection coordination and settings philosophy across the MV and LV system;

- Earthing and bonding design (including touch/step potential assessment and lightning/surge protection requirements);
- Harmonic assessment and mitigation requirements at both LV and MV interfaces;
- Final general arrangement layouts and constructability methodology for the cooling tower slab installation; and
- Commissioning, operational and maintenance procedures, including curtailment interface testing and safe energisation/isolation procedures.

Subject to the above confirmations and Eskom's internal approvals and regulatory alignment processes, the proposed Grootvlei Phase 1 deployment provides a practical and low-impact route to monetise available capacity at Grootvlei while delivering a controllable load that can contribute to system flexibility. Bitmach is ready to proceed into Stage 3 design development with Eskom Generation, Distribution and Transmission stakeholders to confirm the preferred connection option, finalise technical interfaces, and produce a procurement-ready basic design package for implementation.